FM Auto&Servizi
CAMBI AUTOMATICI
Drivetrain specialists

ZF 5HP18
Automatic transmission

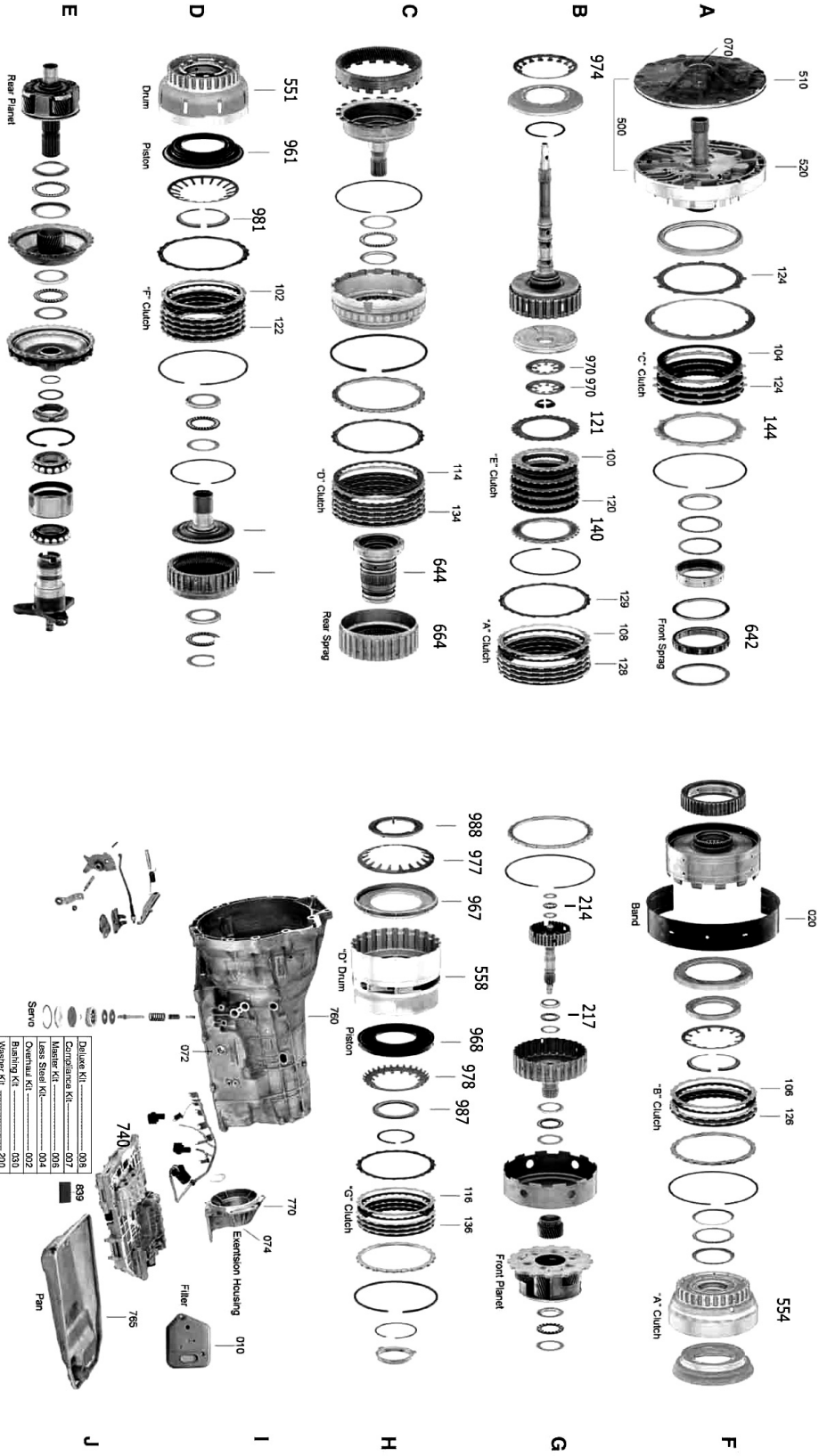

© F.M. Auto & Servizi
Drivetrain specialists
www.fmautoeservizi.com
info@fmautoeservizi.it