FM Auto&Servizi
CAMBI AUTOMATICI
Drivetrain specialists

GM 6L80E
Automatic transmission

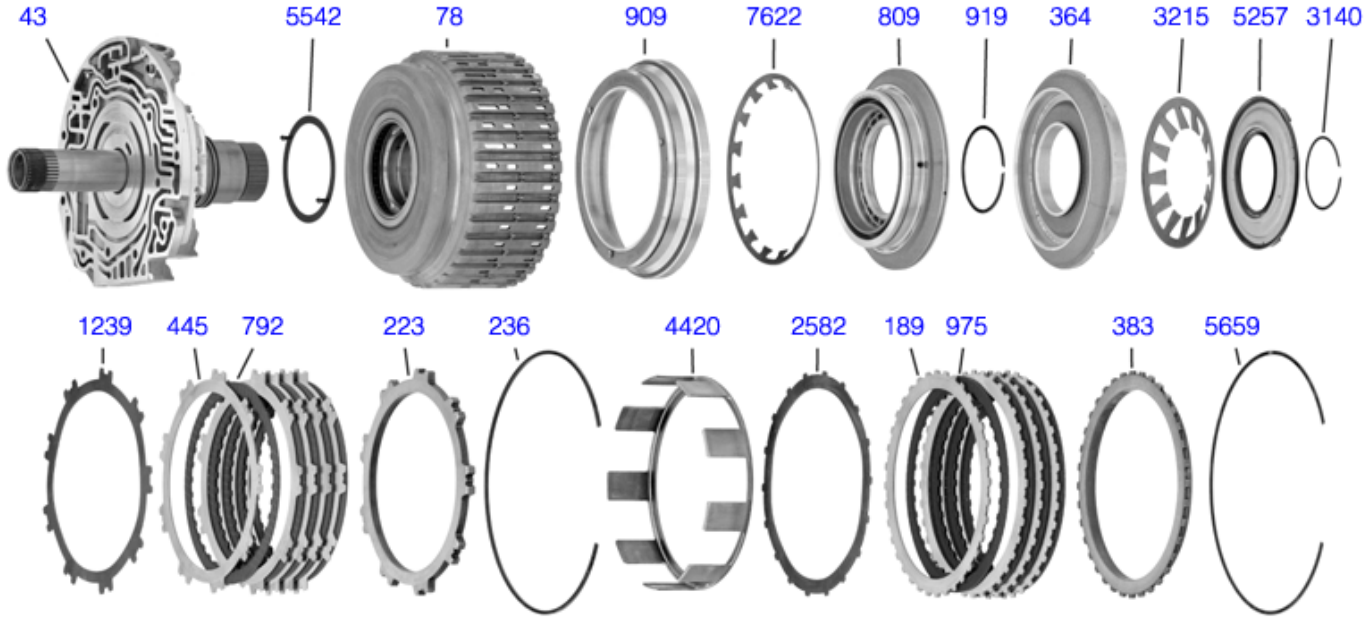

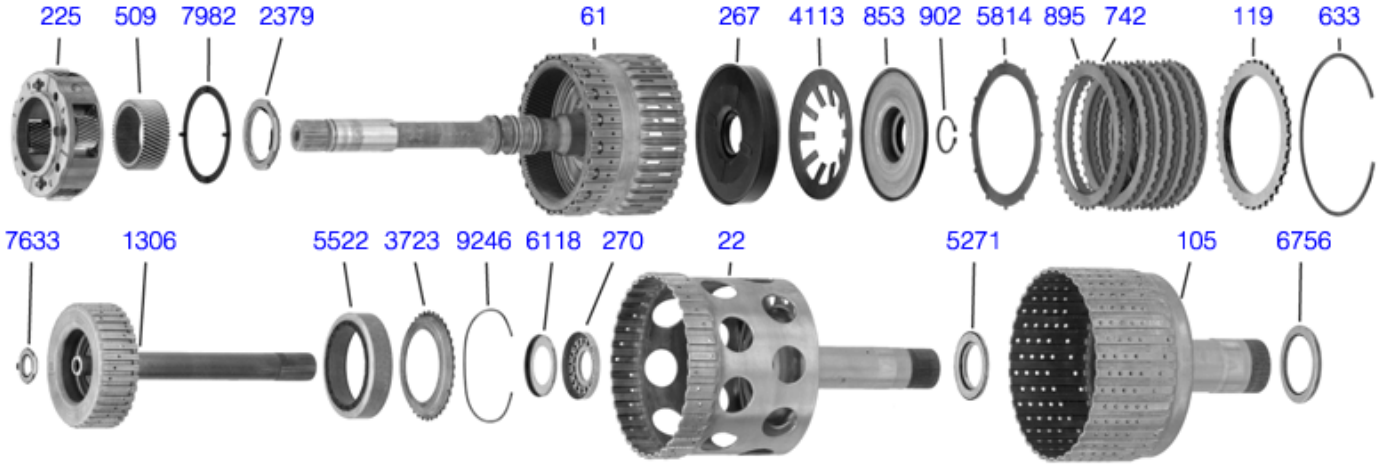

© F.M. Auto & Servizi
Drivetrain specialists
www.fmautoeservizi.com
info@fmautoeservizi.it

FM Auto&Servizi
CAMBI AUTOMATICI
Drivetrain specialists

GM 6L80E
Automatic transmission

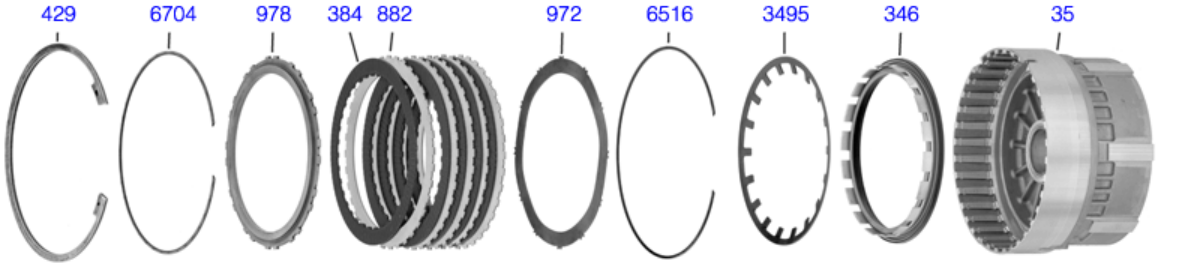

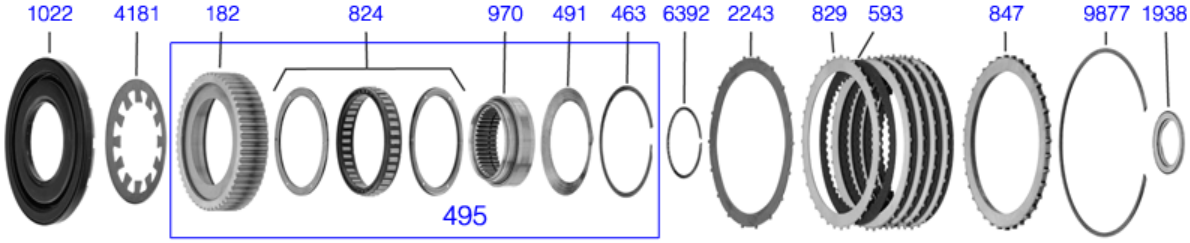

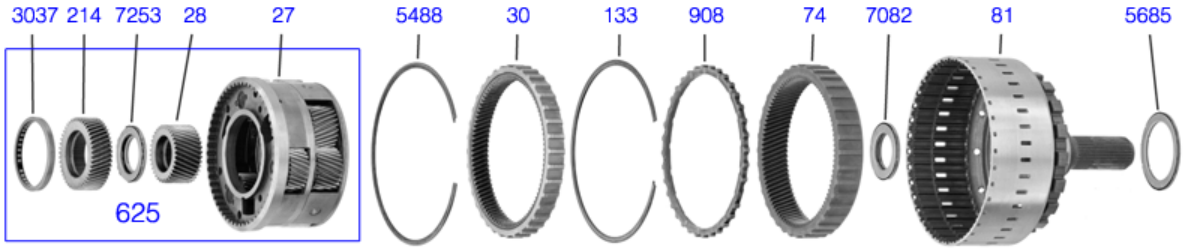

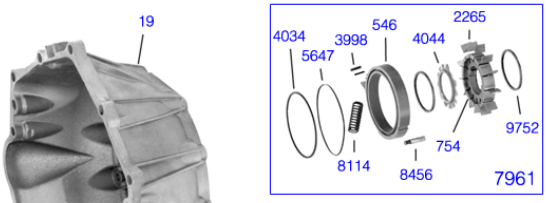

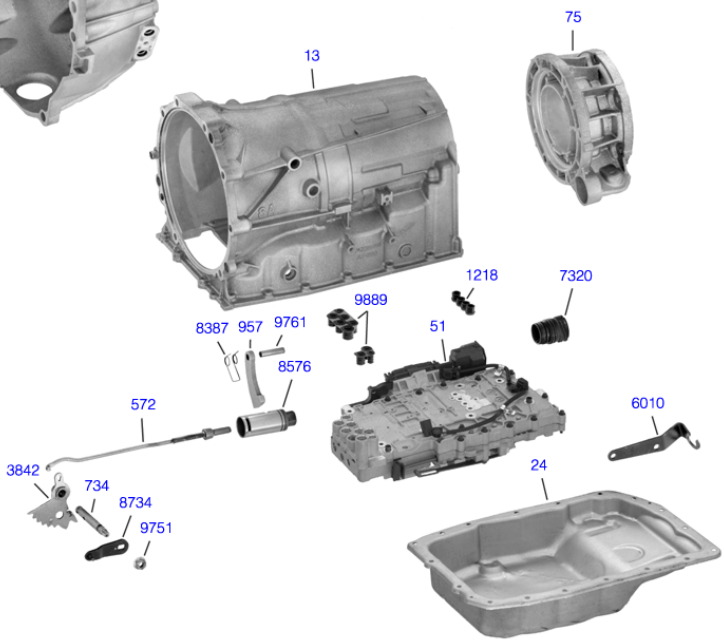

© F.M. Auto & Servizi
Drivetrain specialists
www.fmautoeservizi.com
info@fmautoeservizi.it